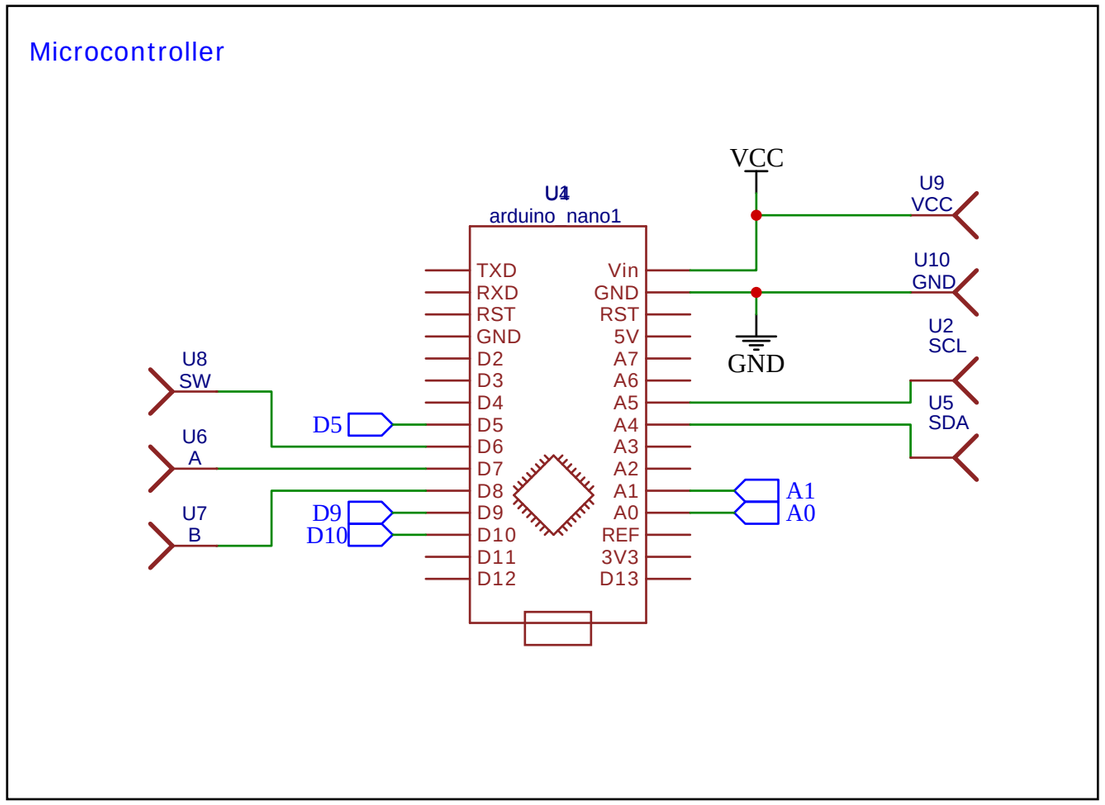

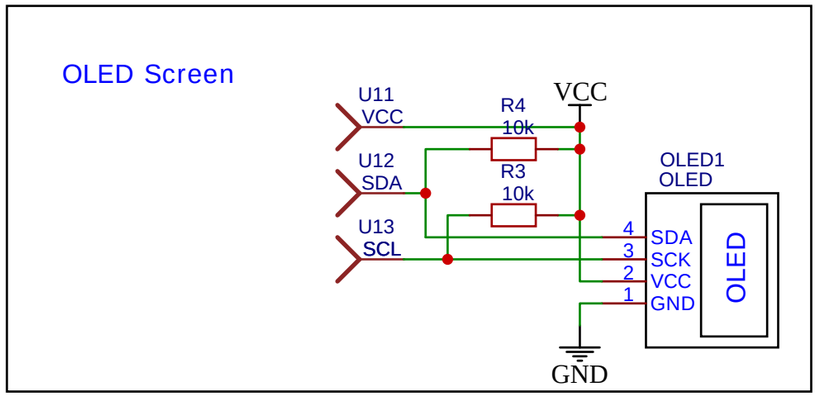

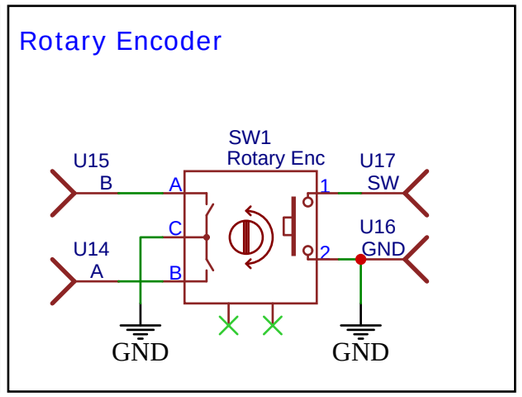

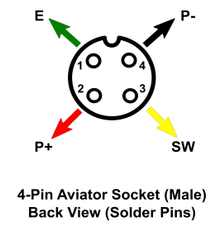

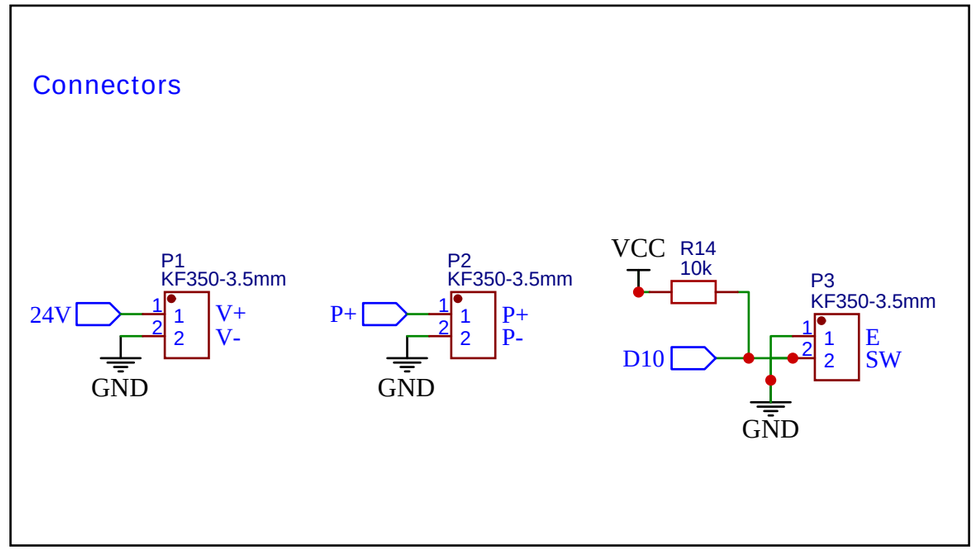

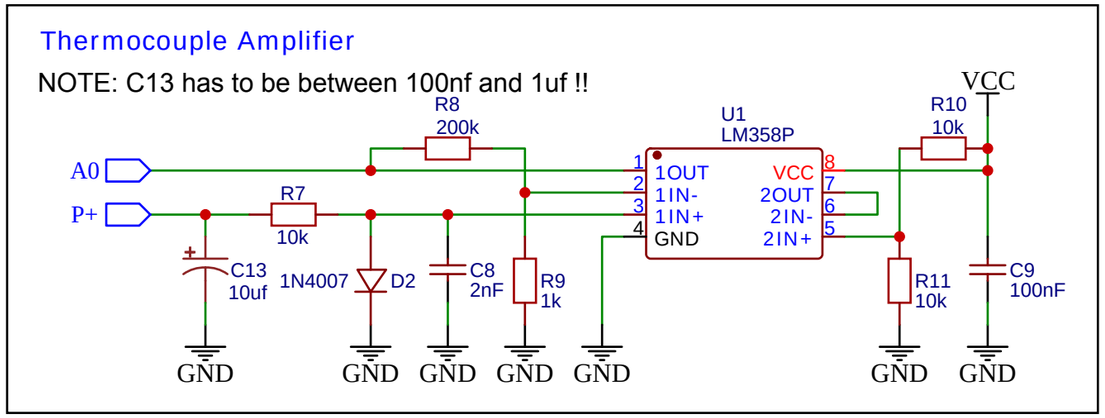

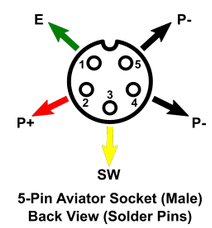

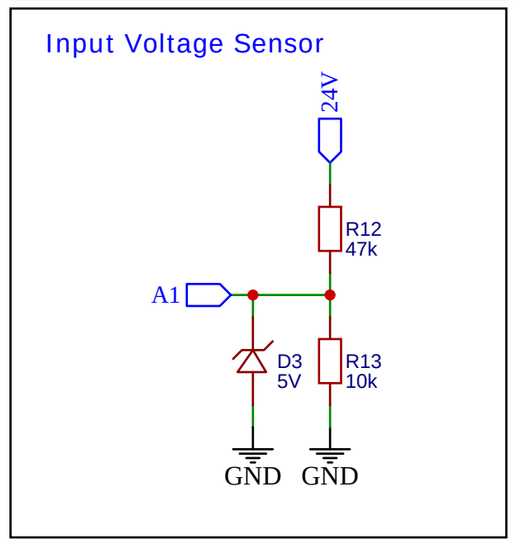

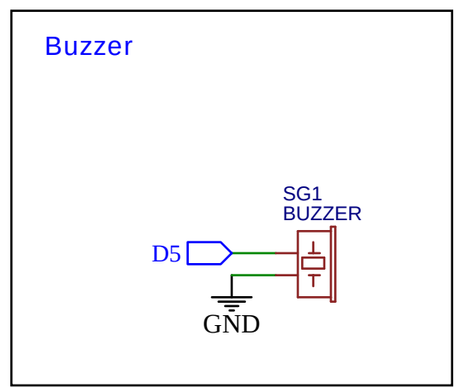

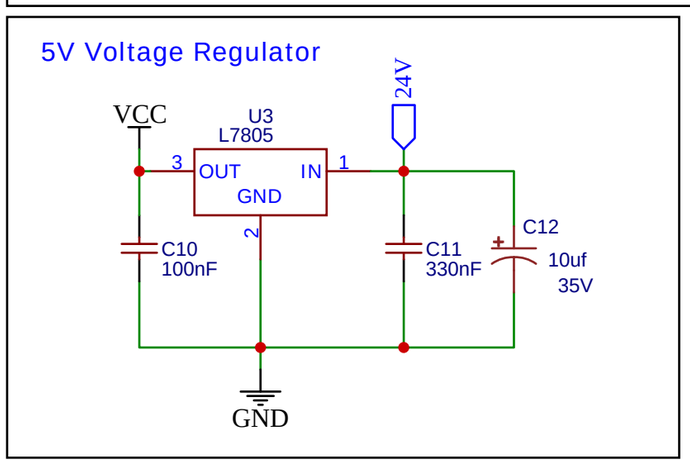

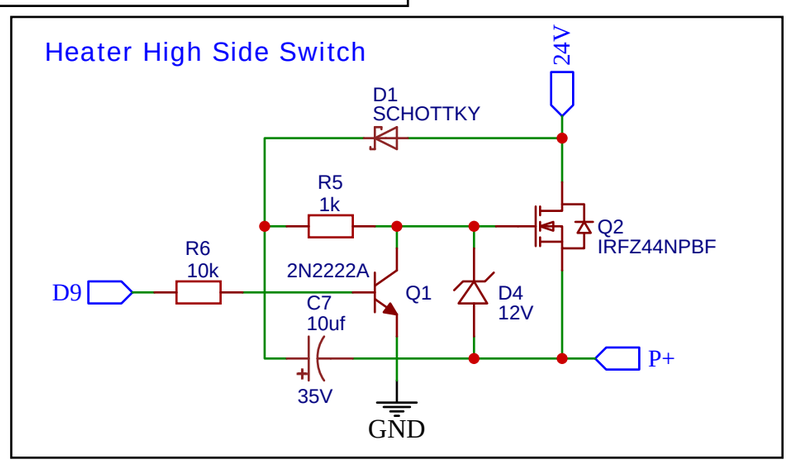

TITLE: T12 Soldering Station

REV: 2.7

Company: HM Projects

Sheet: 1/1

Date: 2019-06-08

Drawn By: S. Valentin

EasyEDA